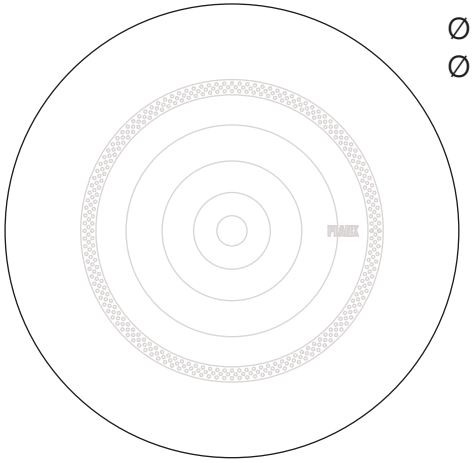

TOP VIEW

Ø 60 cm
Ø 23 ⅝ inch

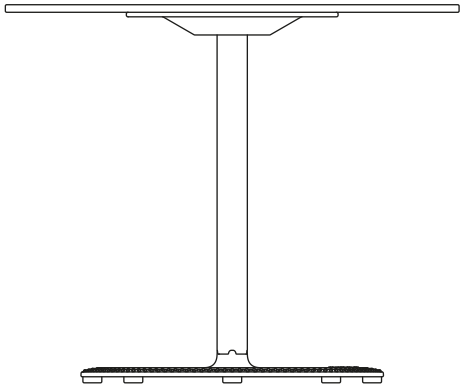

FRONT VIEW

50 cm
19 ⅝ inch

60 cm
23 ⅝ inch

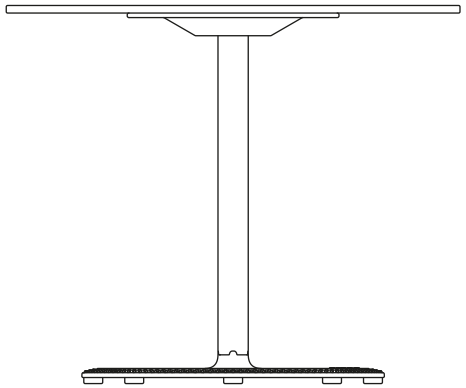

SIDE VIEW

40 cm
15 ¾ inch

PLANK®

DIMENSIONS | BON TABLE | MOD. 9380-51 | DESIGN BIAGIO CISOTTI & SANDRA LAUBE | SCALE 1:10

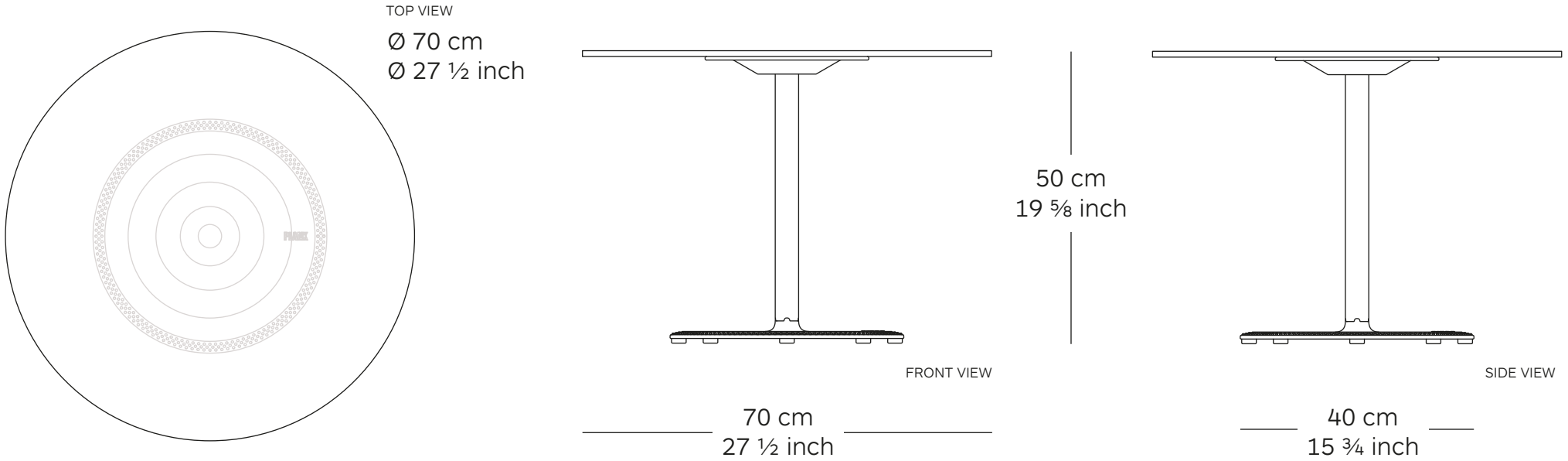

PLANK®

DIMENSIONS | BON TABLE | MOD. 9382-51 | DESIGN BIAGIO CISOTTI & SANDRA LAUBE | SCALE 1:10